Tech-note

eTOP-EPC Industrial Personal Computers

The eTOP-EPC (Embedded Personal Computer) is a new family of Industrial Personal Computers designed to offer reliability and performance without compromises.

- Available with 12.1" and 15" TFT display size
- High-brightness display option
- Touchscreen
- Transmeta TC5900 CPU
- Available with Windows XP or Windows XP Embedded operating systems
- Cut-out compatible with UniOP products
- 10/100 Ethernet port
- Front and rear USB 2.0 ports
- Optional UPS module

Highlights

The eTOP-EPC (Embedded Personal Computer) is a new family of Industrial Personal Computers designed to offer reliability and performance without compromises.
Rugged design for direct panel mounting make the eTOP-EPC ideal for most industrial, building automation and maritime applications.

- Fanless. The low-power design results in optimal performance with very low power consumption. The product does not require a forced air cooling system. Reliable operation is ensured over the complete operating temperature range. The PCI interface option requires fan cooling due to the extra power consumption of the PCI board.
- Embedded. A compact CPU board integrates all the facilities required by an industrial Panel PC. The system includes 2 CompactFlash slots, one PC/104 expansion slot, 4+4 isolated digital I/O and one socket for non-volatile RAM.
- Diskless. Embedded operating systems and solid-state memories (CompactFlash) offer the highest reliability for the most difficult environments.
- Optional PCI expansion slot. One internal slot compatible with half-size PCI boards. The option offers compatibility with popular data acquisition and networking solutions.
- Optional UPS add-on module offers increased system availability. The UPS module allows up to 15 minutes of operation without power with internal batteries.
- The high-brightness version of the 15" unit is ideal for applications in environments with high level of illumination where normal TFT displays offer poor readability. Display dimming allows adapting the brightness to the level for optimal viewing under all conditions.

Technical Data

Display	
Resolution	eTOP-EPC12 SVGA eTOP-EPC15 XGA
Active Display Area	eTOP-EPC12 12.1” eTOP-EPC15 15”
Type	TFT
Colors	16M
Backlight	CCFL, 50000 h (note 1)
Brightness	eTOP-EPC12 250 cd/m^2 typ eTOP-EPC15 250 cd/m^2 typ eTOP-EPC15/HB 600 cd/m^2 typ
Dimming	Yes
Technical Data	
Processor	Transmeta TC5900 800MHz
RAM	128MB DDR 1xSODIMM Expandable to 512MB
Video RAM	4 MB
Solid State Disks	CompactFlash slot (internal) CompactFlash slot (external) NOVRAM socket (max 2MB)
Operating System	Windows XP Windows XP Embedded
Front panel	
Touchscreen	Analog resistive
Interfaces	USB 2.0
System LED’s	Power-on indicator
Interfaces	
Ethernet	10/100Mb
USB	5 USB 2.0 (one in the front panel)
Keyboard/Mouse	PS/2 with external adapter
VGA	Yes
Serial	2 RS-232 (DB9) 1 RS-232/422/485 (DB15)

Options	
Hard disk	40GB 2.5” IDE/ATA (optional, requires HD add-on Kit)
Parallel Port	SPP, EPP, ECP bi-directional
Digital I/O	4 DI 24VDC 4 DO 24VDC 0.5A with optical isolation
UPS	UPS add-on module. 15min backup time
Expansion slots	max 2 PC/104 or PC/104-Plus or 1 internal half-size PCI and 1 PC/104 (note 3)
Ratings	
Power supply voltage	18 - 36 VDC
Power consumption (max at 24 VDC)	eTOP-EPC12 26W (note 2) eTOP-EPC15 35W (note 2)
Weight	eTOP-EPC12 3.4 Kg eTOP-EPC15 4.0 Kg
Environmental Conditions	
Operating temperature	0 to 50 °C without hard disk 0 to 45 °C with hard disk
Storage temperature	-20 to +60 °C
Operating and storage humidity	5 – 80 % RH non-condensing
Protection class	IP65 (front panel)
Approvals	CE
Dimensions	
Faceplate WxH	eTOP-EPC12 348x278 mm eTOP-EPC15 403x318 mm
Cutout AxB	eTOP-EPC12 326x256 mm eTOP-EPC15 381x296 mm
Cutout depth D	Variable with configuration Minimum: 74.8 mm
Front panel thickness P	6 mm

Note 1: the lamp lifetime is the typical value for continuous operation at 25ºC.
Note 2: configured with RAM 512MB, CF 512MB
Note 3: max 2 PC/104 or PC/104-Plus expansions. The PCI slot requires factory configuration and must be specified when ordering the product. The PCI slot is incompatible with PC/104-Plus and requires fan cooling. Please note that PC/104 expansions require adapters that must be specified when ordering the product.

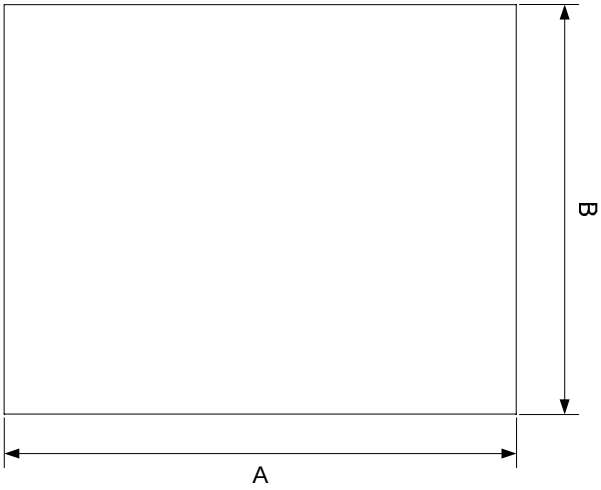

Cutout

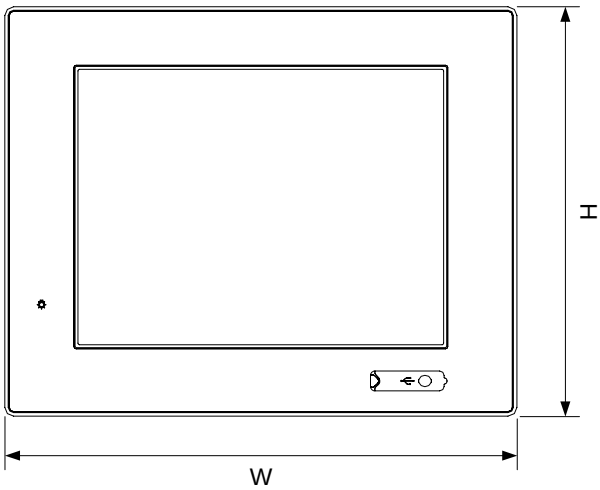

Front View

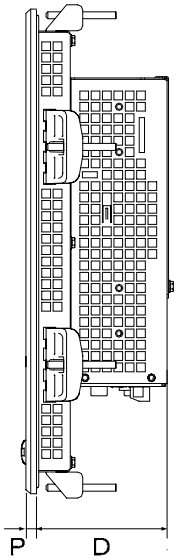

eTOP-EPC12 Side View

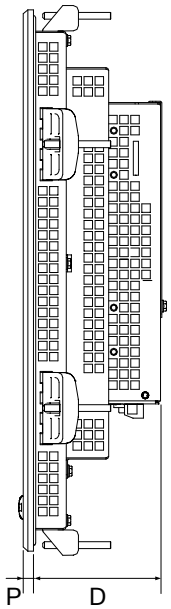

eTOP-EPC15 Side View

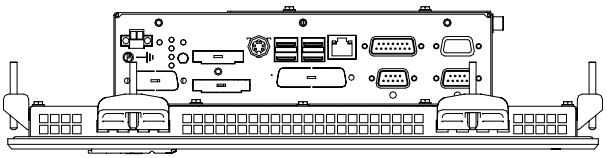

eTOP-EPC Bottom View with Connections

Ordering Information

eTOP-EPC12/T/128MB	TFT 12.1" SVGA, touchscreen, TM5900 800MHz, 128 MB RAM, fanless
eTOP-EPC12/T/256MB	TFT 12.1" SVGA, touchscreen, TM5900 800MHz, 256 MB RAM, fanless
eTOP-EPC12/T/512MB	TFT 12.1" SVGA, touchscreen, TM5900 800MHz, 512 MB RAM, fanless
eTOP-EPC12/T/128MB/PCI	TFT 12.1" SVGA, touchscreen, TM5900 800MHz, 128 MB RAM, PCI Slot
eTOP-EPC12/T/256MB/PCI	TFT 12.1" SVGA, touchscreen, TM5900 800MHz, 256 MB RAM, PCI Slot
eTOP-EPC12/T/512MB/PCI	TFT 12.1" SVGA, touchscreen, TM5900 800MHz, 512 MB RAM, PCI Slot
eTOP-EPC15/T/128MB	TFT 15" XGA, touchscreen, TM5900 800MHz, 128 MB RAM, fanless
eTOP-EPC15/T/256MB	TFT 15" XGA, touchscreen, TM5900 800MHz, 256 MB RAM, fanless
eTOP-EPC15/T/512MB	TFT 15" XGA, touchscreen, TM5900 800MHz, 512 MB RAM, fanless
eTOP-EPC15/T/128MB/PCI	TFT 15" XGA, touchscreen, TM5900 800MHz, 128 MB RAM, PCI Slot
eTOP-EPC15/T/256MB/PCI	TFT 15" XGA, touchscreen, TM5900 800MHz, 256 MB RAM, PCI Slot
eTOP-EPC15/T/512MB/PCI	TFT 15" XGA, touchscreen, TM5900 800MHz, 512 MB RAM, PCI Slot
eTOP-EPC15/T/HB/128MB	TFT 15" XGA High Brightness, touchscreen, TM5900 800MHz, 128 MB RAM, fanless
eTOP-EPC15/T/HB/256MB	TFT 15" XGA High Brightness, touchscreen, TM5900 800MHz, 256 MB RAM, fanless
eTOP-EPC15/T/HB/512MB	TFT 15" XGA High Brightness, touchscreen, TM5900 800MHz, 512 MB RAM, fanless
eTOP-EPC15/T/HB/128MB/PCI	TFT 15" XGA High Brightness, touchscreen, TM5900 800MHz, 128 MB RAM, PCI Slot
eTOP-EPC15/T/HB/256MB/PCI	TFT 15" XGA High Brightness, touchscreen, TM5900 800MHz, 256 MB RAM, PCI Slot
eTOP-EPC15/T/HB/512MB/PCI	TFT 15" XGA High Brightness, touchscreen, TM5900 800MHz, 512 MB RAM, PCI Slot

Only the base products are shown in the list. Please refer to the price list for the complete list of options and accessories.

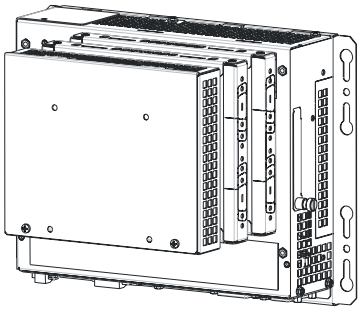

The figure shows an example of a PC with three expansion options mounted: 2 PC/104 expansions and one hard disk expansion module.
The PC/104 expansion modules will be mounted only if they are required.
The hard disk module must always be mounted as the last one.
The table below shows the matrix of compatibility of the expansion options.

PCI Slot	First Expansion Module	Second Expansion Module	Hard Disk Module
No	PC/104 or PC/104-Plus	PC/104	Yes
Yes	PC/104	PC/104	Yes

Tn246
Ver. 1.00
Copyright © 2006 Sitek S.p.A. – Verona, Italy
Subject to change without notice
The information contained in this document is provided for informational purposes only. While efforts were made to verify the accuracy of the information contained in this documentation, it is provided “as is” without warranty of any kind.
www.exor-rd.com