# UniOP eSOPx39 and eTOPx39

The newly designed outdoor panels: eSOP39, eTOP39 are state-of-the-art HMI with NFI touch screen and a 10.4” Advanced TFT graphic display specifically designed for outdoor use with extreme light conditions. The novel plastic case and aluminum bezel offers a rugged design and an appealing look for any application.

## Highlights

- **10.4” Advanced Transflective color display**
- **VGA (640x480 pixels) resolution**
- **NFI touch screen**
- **Extended temperature range for all models**
- **Connection to industrial bus systems and Ethernet**
- **Compatible with HMIcontrol and local I/O subsystems (eTOP39)**
- **Also available with Windows CE, Linux.**

Two state-of-the-art human interface technologies are featured in these HMI panel specifically designed for outdoor use:

- **NFI** (Near Field Imaging) - The NFI touch screen sensor uses low level electrostatic field and true glass. Best results for transparency and touch functionality. It is suitable for exposition to sunlight.

- **ATFT** (Advanced TFT) - This new variation of the TFT technology couples the light transmission and reflection for optimal readability and contrast in all conditions, including sunlitght.

## Technical data

The product is available in two versions that differ for the enclosure and type of installation.

| **Display** | **eSOPx39** | **eTOPx39** |
|---|---|---|
| Graphic resolution | 640x480 | |
| Type | Advanced Transflective TFT | |
| Colors | 256 | |
| Backlight | CCFL | |
| Lifetime | Typical 50.000h | |
| Brightness | 250 Cd/m2 | 350 Cd/m2 |
| Dim function | Yes | |
| **Memory** | | |
| User memory non removable* | 8 MB(32 MB eSOP139) | 8 MB (32 MB eTOP139) |
| *future removable | | |
| **Front panel** | | |
| System keys | 2 | |
| Touch screen | NFI | |
| System LED's | - | 5 |
| **Connections** | | |
| PC/Printer port | Yes | |
| PLC port | RS-232, RS-485, RS-422, 20 mA CL | |
| Aux port (fieldbus and Ethernet connection) | Yes, with optional modules | |
| **Functionality** | | |
| Page size | - | |
| Number of variables per page | Unlimited | |
| Recipe memory | 32 KB | |
| UniNet network | Client/Server | |
| Alarms | 1024 | |
| Event list | 1024 | |
| Alarm info page | Yes | |
| Password | Yes | |
| Battery | Yes | |
| Hardware RTC | Yes, battery back-up | |
| Screen saver | Yes | |
| Buzzer | Yes | |
| Power supply voltage | 12 to 36 VDC (For battery supply) | |
| Max power consumption | ~ 700 mA at 24 VDC | |
| Fuse | Automatic | |
| Weight | ~ 3,4 Kg | |
| Operating temperature | -10°C to 55°C | -10°C to 55°C |

| | | |
|---|---|---|
| Operating and storage humidity | 5 - 85 % RH non-condensing | |
| Protection class | IP55 | IP65 (front panel) |

For all outdoor application we recommend to position the panel as vertically as possible and install a canopy over it to provide extra protection from precipitation and direct sunlight.

The product is designed for installation in an industrial environment in compliance with the regulations:

| | |
|---|---|
| Emitted interference | EN 50081-2, 1993 |
| Noise immunity | EN 50082-2, 1994 |

## Front dimensions and cutout

| | eSOPx39 | | eTOPx39 | |
|---|---|---|---|---|
| Faceplate LxH | 329x230 | 13”x 9” | 287x232 mm | 11.30x9.14“ |
| Depth | | | 102 mm | 3.58” |
| Cutout AxB | bracket mounted | | 276x221 mm | 10.87x8.70“ |
| Max panel thickness | bracket mounted | | 5 mm | 0.2” |

**eTOPx39**

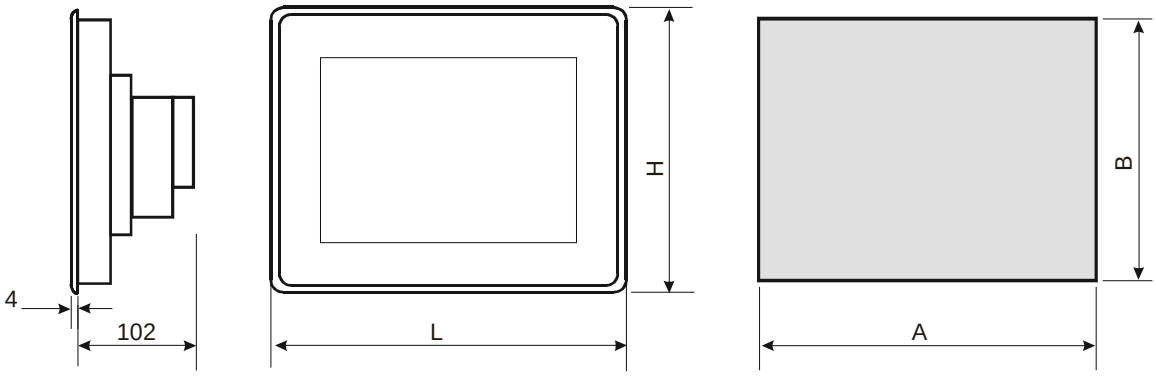

**eSOPx39**

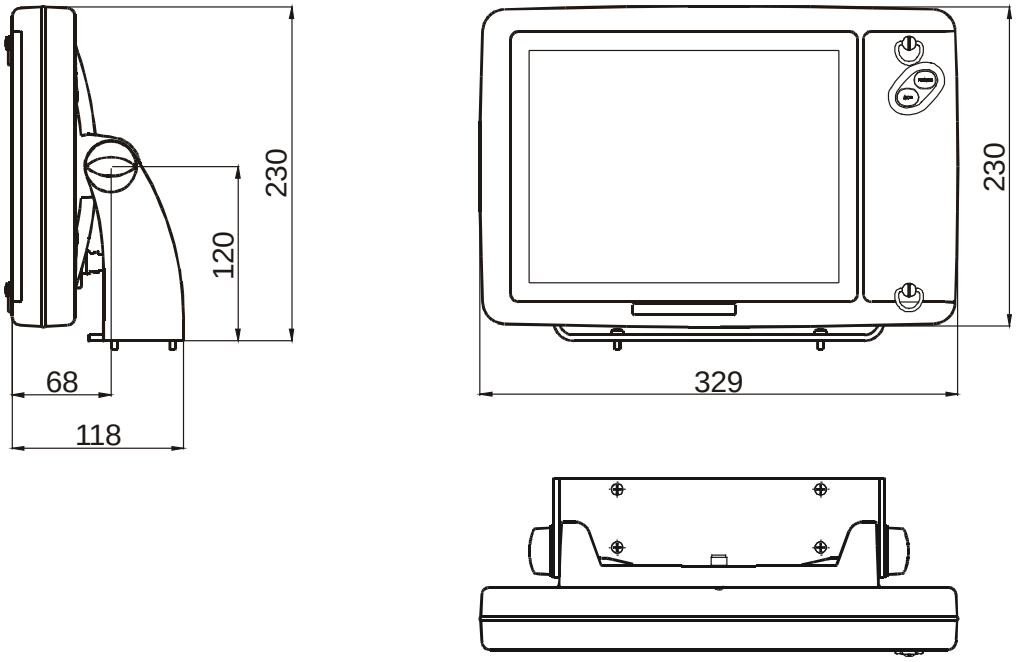


## Connections

**eTOPx39**

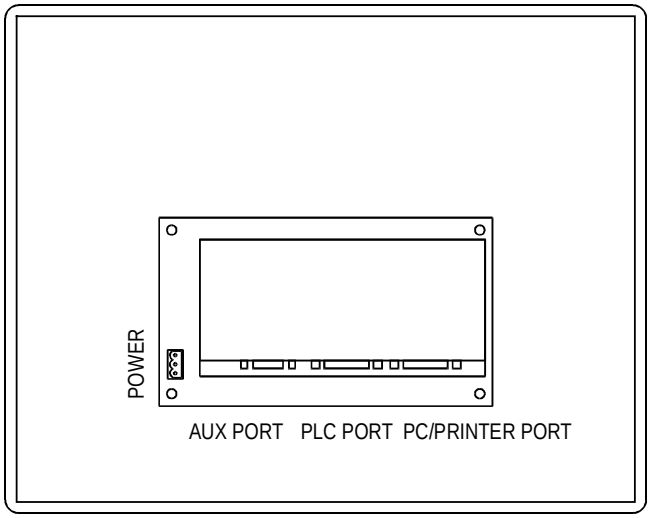


## Indicators and Keypad

The eTOPx39 have several dedicated LED indicators on the front panel of the unit. Functions are described in the table below.

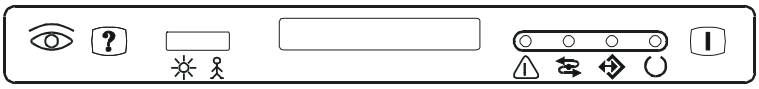

Elements not listed in the table are reserved for future use.

| LED | Color | Status | Meaning |
|---|---|---|---|
| | red | OFF | No hardware problem detected |
| | | BLINK | Battery low |
| | | ON | Hardware fault |
| | green | OFF | No key pressed and no touch cell active |
| | | ON | Key pressed or touch cell active (visual feedback) |
| | green | OFF | Hardware fault |
| | | ON | Unit in operation |
| | green | BLINK | Communication error |
| | | ON | Communication OK |
| | red | OFF | No alarms |
| | | BLINK | Alarm requires acknowledgment |
| | | ON | Alarm active |
| | green | | May be user controlled as LED number 65 using the Macro Editor. Turns ON when recipe/event backup is being performed. |

The version for Windows CE (eTOP139) may have a different assignment of the indicators, depending on the application.

The service area at the top of the product includes two buttons.

| Button | Description |
|---|---|
| | User programmable with the Keyboard Macro Editor. Not available in RDA. Designer 5.08 SP7 or higher is required. |
| | Reserved for future use |

## Ordering informations

| | |
|---|---|
| eSOP39 | Outdoor & Sunlight panel |
| eSOP139 | Outdoor & Sunlight panel - Windows CE version |
| eTOP39-0050 | Outdoor & Sunlight panel |
| eTOP139-0050 | Outdoor & Sunlight panel - Windows CE version |


Copyright © 2002 Sitek S.p.A. Italy
Subject to change without notice
www.exor-rd.com