Introduction of Auxiliary Port on UniOP

Beginning in July, 1997, all UniOP operator interface panels (with the exception of the MD00, the MD01 and the MD03) will come standard with **three** (3) communication ports. These ports include:

1. *PC/Printer Port*
   - For connection to a PC for uploading and/or downloading a project file.
   - For connection to a serial printer.
   - For connection to the UniNET network.

2. *PLC Port*
   - For connection to a PLC, motion controller, AC drive, etc..
   - For connection to the UniNET network.

3. *Auxiliary Port*
   - For connection to a high speed network (such as Profibus, Klockner-Moeller Suconet, etc.).

The MD00, MD01 and MD03 will come standard with a PC/PLC Port, as well as an Auxiliary Port.

These panels will be ordered with a *-0045* extension (i.e., MD02R-04-0045). The -0045 extension replaces extensions -0042 through -0044. The high speed network to be connected to, if any, must be specified. High speed network option part numbers will be provided at a later date.

The physical arrangement of these ports and the cutout dimensions for the panels are included in this technote.

Any customers for whom we have designed private label / special units need to inform us as to whether or not they want this new configuration.

Once stock on existing hardware is depleted, all standard hardware will be shipped with three communication ports.

MD00R-02 and MD00R-04 DIMENSIONS

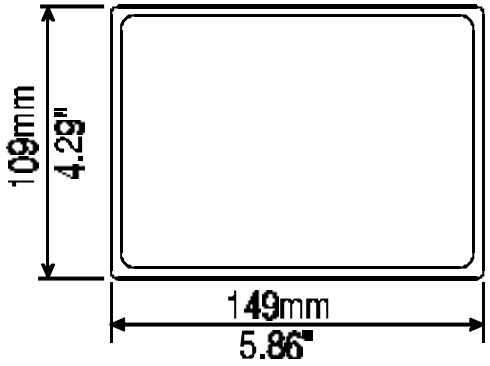

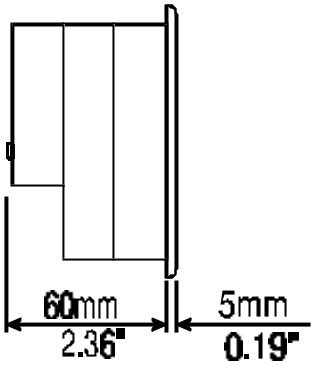

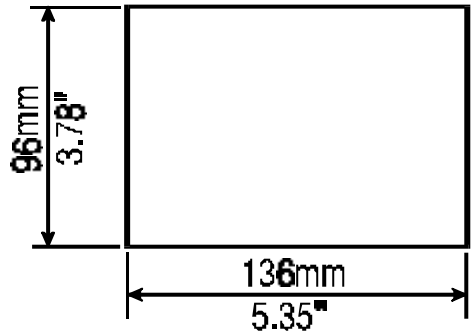

MD01R-02, MD02F-02, MD02R-04, MD03R-02 and MD03R-04 DIMENSIONS

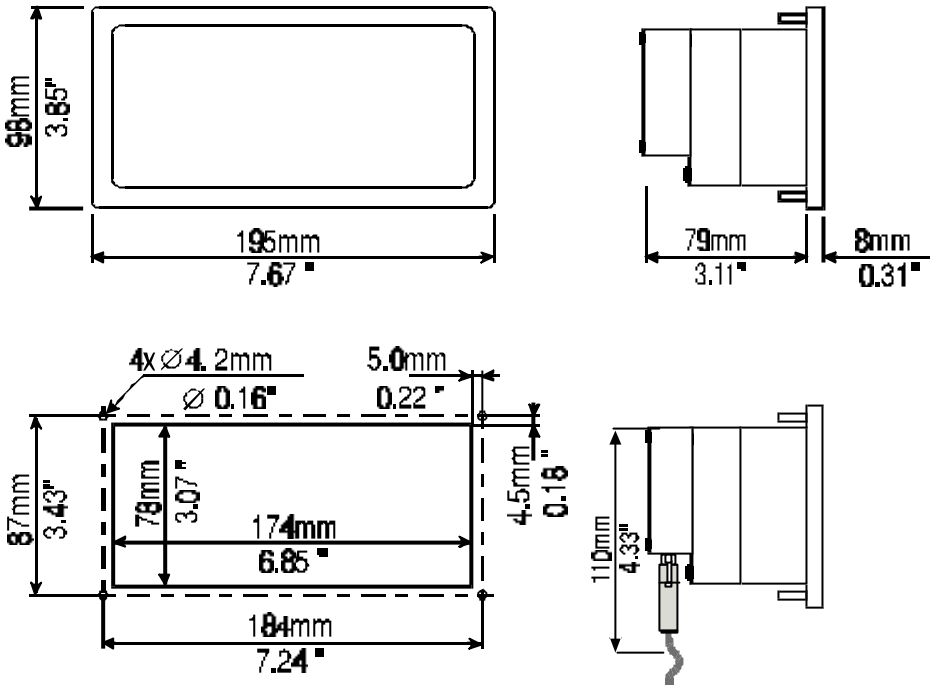

REAR VIEW

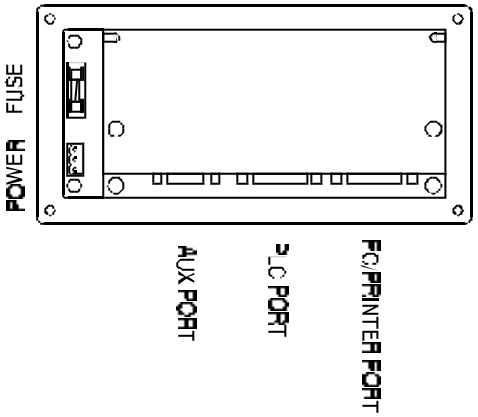

CP01R-04, CP02R-04, CP01F-02, CP02F-02 DIMENSIONS

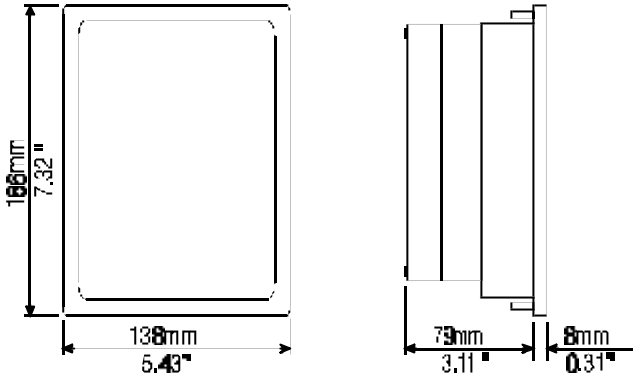

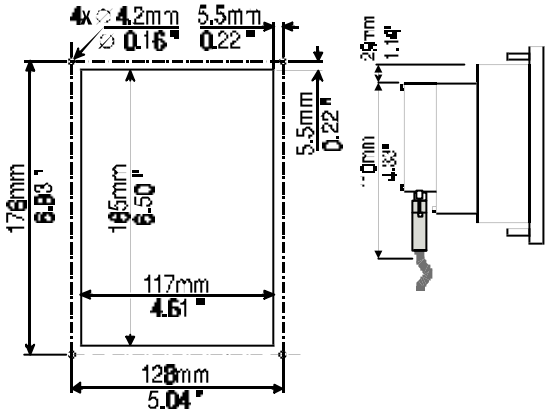

REAR VIEW

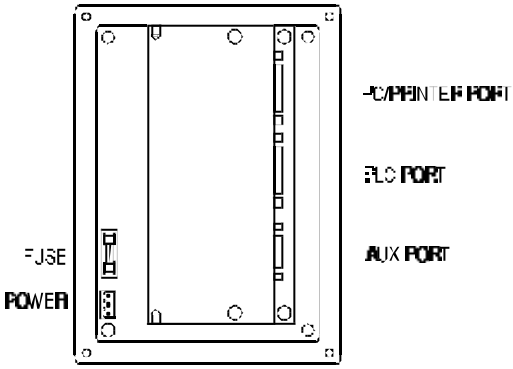

CP04R-04 DIMENSIONS

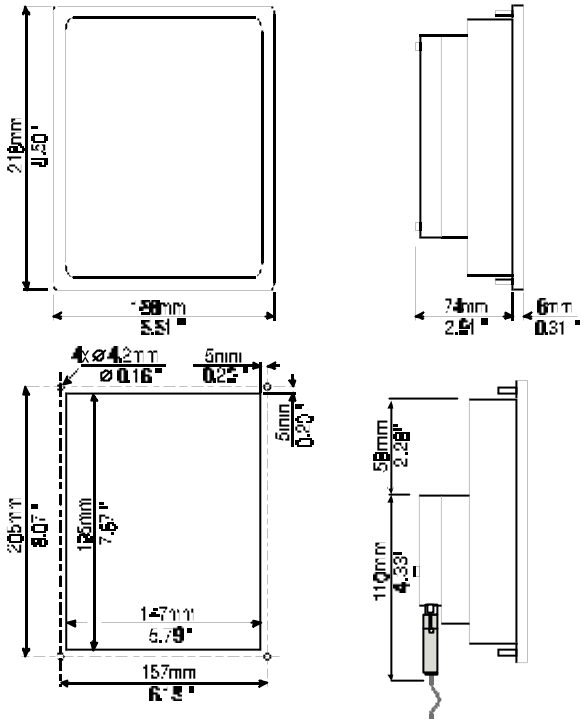

REAR VIEW

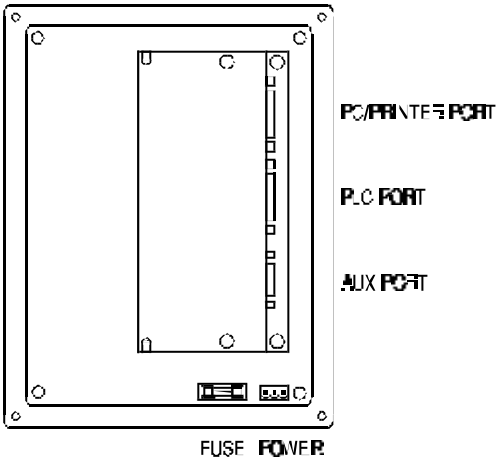

ECT-16, ERT-16, ELT-16, BKDC-16, BKDC-16T, BKDR-16, BKDR-16T, BKDL-16, BKDL-16T DIMENSIONS

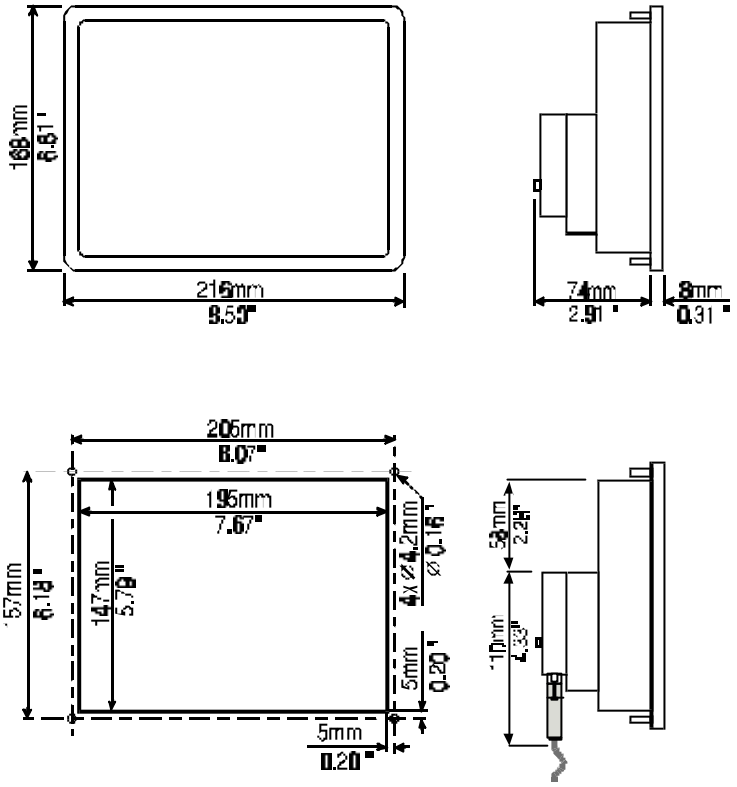

REAR VIEW

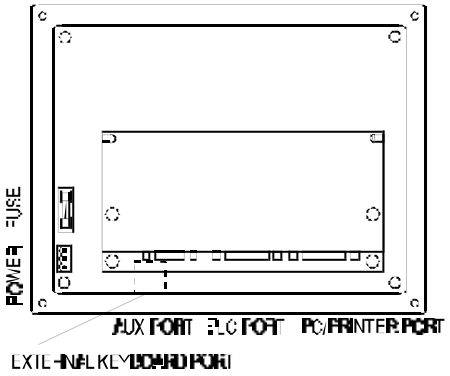

EF-02, EF-04, ER-04 DIMENSIONS

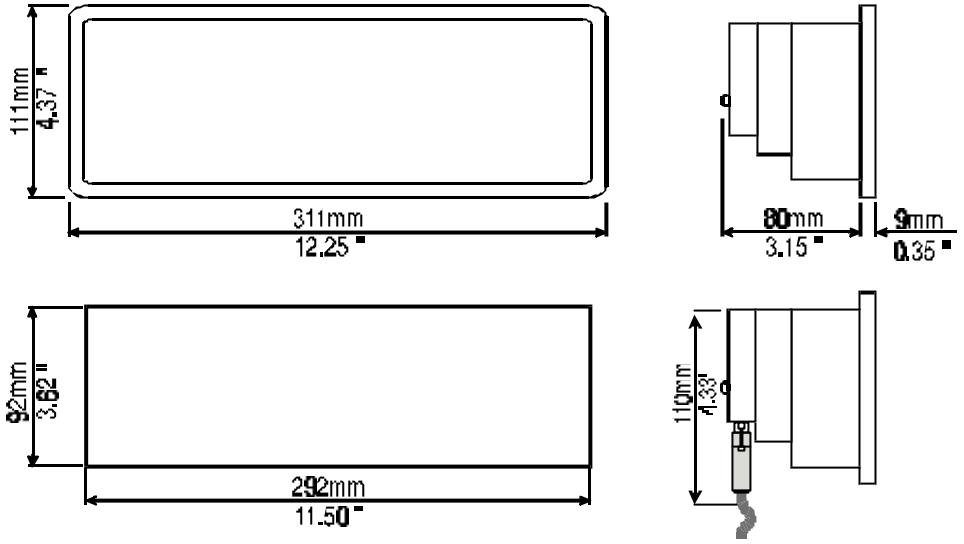

REAR VIEW

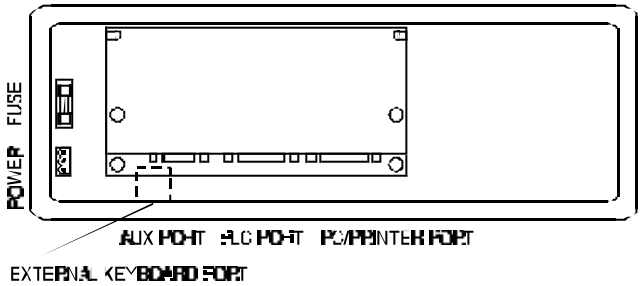

EL-16, ER-16, ET-16TA, ER-16TD, MKDF-02, MKDF-04, MKDR-04 DIMENSIONS

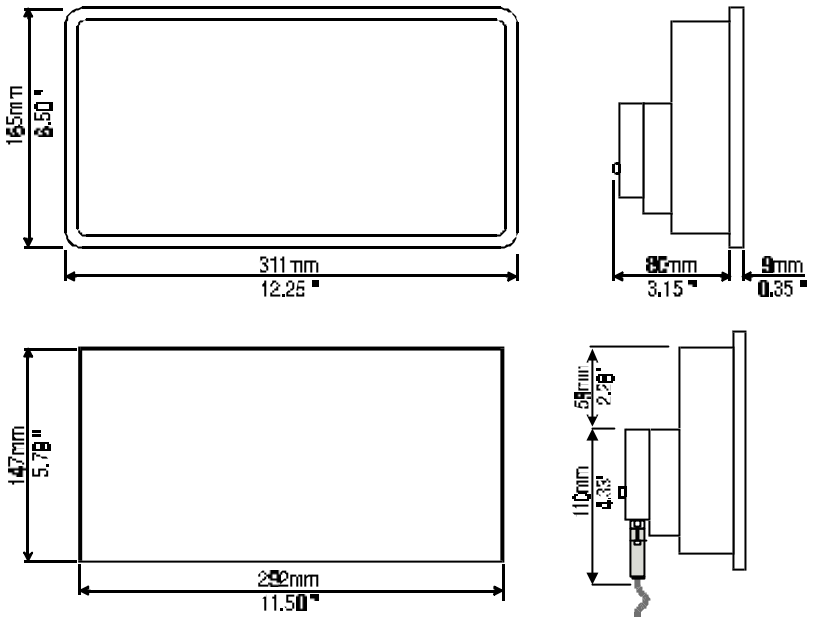

REAR VIEW

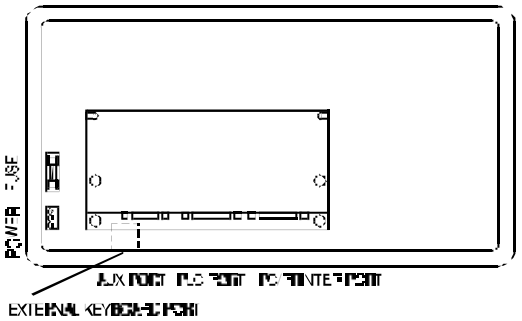

MKDL-16, MKDR-16, MKDR-16T, EL-25, EL-25T, ER-25, ER-25T, ECT-VGA DIMENSIONS

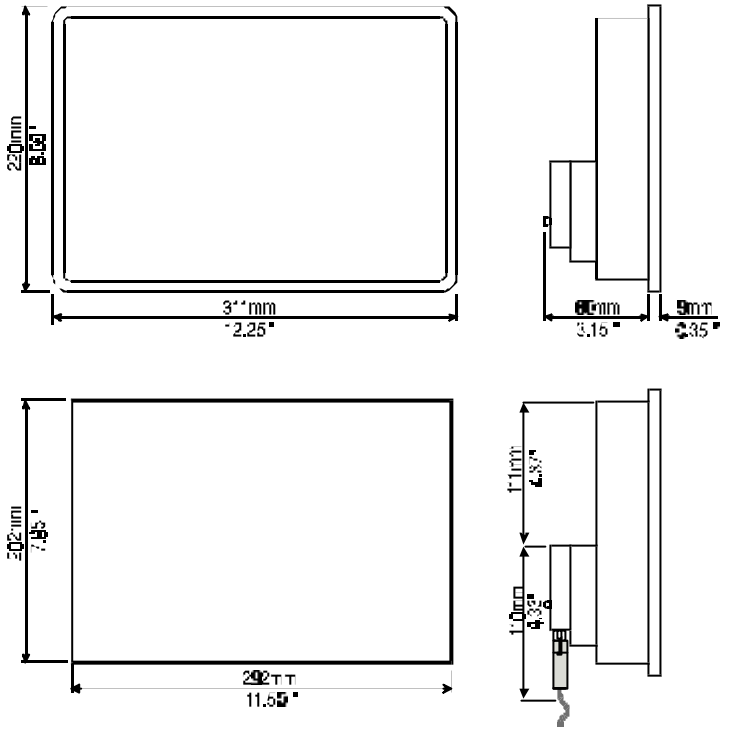

REAR VIEW

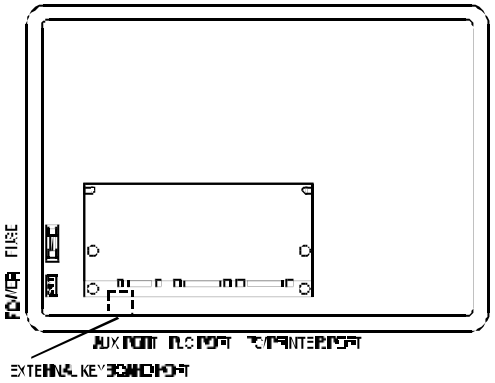

MKDL-25, MKDR-25, MKDC-VGA DIMENSIONS

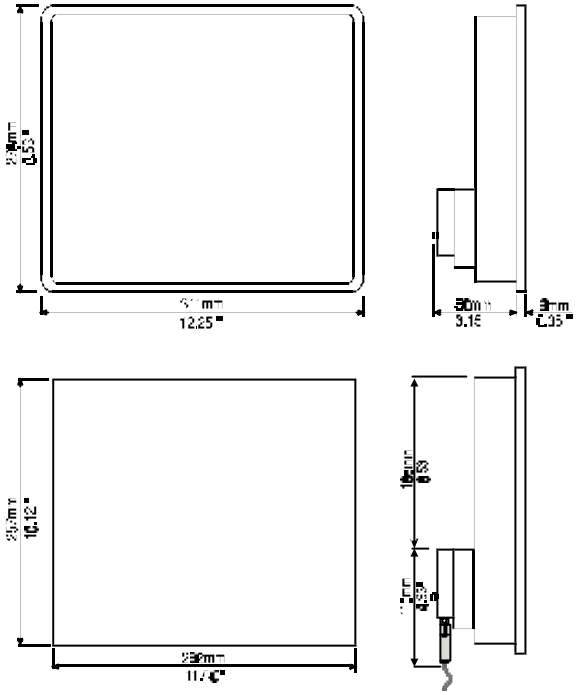

REAR VIEW

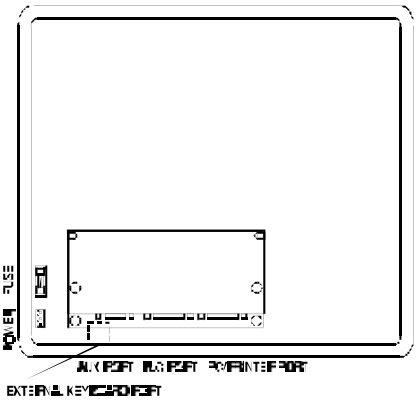

T320 + TCA07 MECHANICAL DIMENSIONS

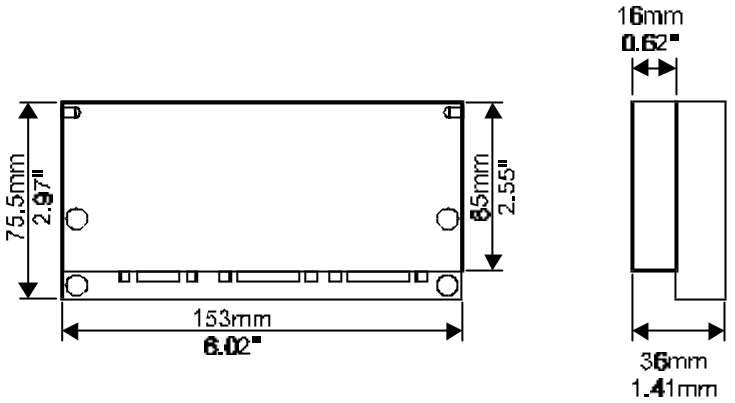

Technical assistance may be obtained :
In North America EXOR at 1 -513-874-4665.
In Europe EXOR Italy at +39 045 - 8779068