Tech-note

VMO10 Video Input Module

The VMO10 Video Input Module has been designed to display live video images on the UniOP screen from a camera or from a device or computer with a VGA output.

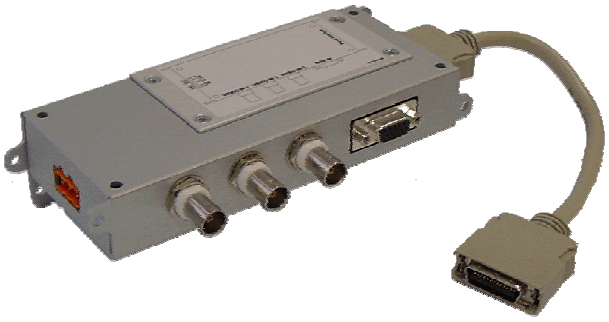

- 3 CVBS video input channels
- 1 RGB video input channel (VGA)
- Simultaneous presentation of all channels on screen
- User programmable window size
- Video frame sampling
- Video cropping
- Compatible with B-type eTOP panels

Highlights

The VMO10 Video Input Module allows presentation of video images on the UniOP screen. The flexibility of configuration and the quality of the images make it the ideal solution for monitoring, diagnostic, surveillance in the most various applications area such as: building automation, marine applications, industrial automation.
Among the most important features you can find:

- Supports up to 3 composite video (CVBS) input channels for connection to video cameras and all video sources that have a CVBS output (TV tuners, DVD players, VCR players)
- One VGA-compatible RGB video input channel for connection to computers and devices that have a VGA output
- Compatible with B-type eTOP panels that have DX port and 64K color support: eTOP10B, eTOP20B, eTOP33B, eTOP40B and eTOP50B
- Video input channels can be presented on screen independently or simultaneously. All four channels can be shown on screen on separate windows
- Video windows can be freely resized and positioned on the screen. Full screen display of one input channel is possible.
- Image cropping to display only parts of the input image
- Image resampling to adapt image to the size of the screen
- Designer 6.04 or higher is required to create applications with video input objects
- Programmable commands available to operate on the images: selection of the channel, brightness regulation, panning and zooming.

Technical Data

Video Inputs	
Video Input 1	CVBS (PAL, NTSC)
Video Input 2	CVBS (PAL, NTSC)
Video Input 2	CVBS (PAL, NTSC)
RGB Input	Standard VGA port (RGB with separate Hsync and Vsync)
Electrical Ratings	
CVBS Inputs	Analog 0.7V
RGB Input	Analog min 0.5 V, max 1.0V
Interfaces	
Video Input 1-3	BNC connector
RGB Input	Standard VGA 15 pin D-sub socket connector
Functionality	
Video Input resolution and mode	PAL, 720x576, 50Hz NTSC, 720x486, 60Hz
RGB Input resolution	VGA, 640x480, 60Hz VGA, 640x480, 72Hz VGA, 640x480, 75Hz 720x400, 70Hz SVGA, 800x600, 56Hz SVGA, 800x600, 60Hz SVGA, 800x600, 72Hz SVGA, 800x600, 75Hz XGA, 1024x768, 60Hz XGA, 1024x768, 70Hz
Brightness regulation	Yes, software (only for CVBS inputs)
Contrast regulation	Yes, software (only for CVBS inputs)
Transparency color	Supported
Ratings	
Power supply voltage	24VDC (min 18VDC, max 30VDC), must be powered at the same time as the panel.
Current consumption	0.25A max
Weight	0.4 Kg
Environmental Conditions	
Operating temperature	0 to 45°C
Storage temperature	-20 to +70°C
Operating and storage humidity	5 – 85% RH non-condensing
Protection class	IP20
Dimensions	See figure

The product is designed for installation in industrial environments in compliance with the regulations:

Emitted interference	EN 61000-6-4, 2001
Noise immunity	EN 61000-6-2, 2001

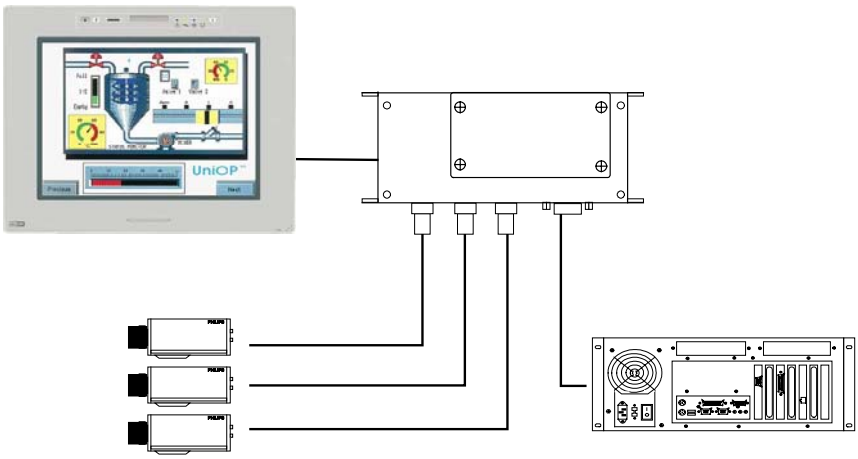

Figure 1 – Connecting Video Input Signals

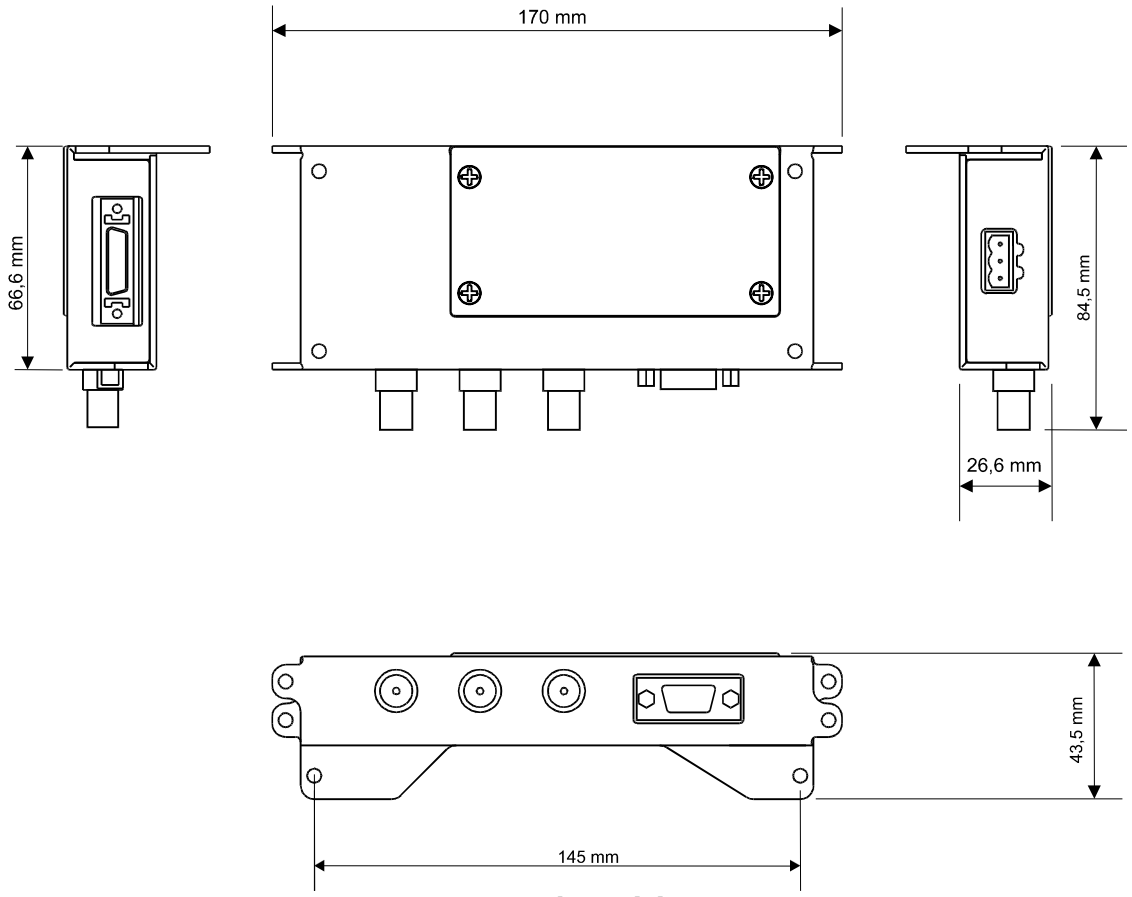

Figure 2 – Mechanical drawings

Ordering Information

VMO10	Video Input Module, 4 channels

Tn209
Ver. 1.00
Copyright © 2005 Sitek S.p.A. – Verona, Italy
Subject to change without notice
The information contained in this document is provided for informational purposes only. While efforts were made to verify the accuracy of the information contained in this documentation, it is provided “as is” without warranty of any kind.
www.exor-rd.com