UniOP Overvoltage Protections

This Technical Note will give you a significant insight on the solutions implemented in the UniOP operator panels to make them more robust to overvoltages applied to the power supply input and to the various communication ports.
The purpose of this information is to help you in reducing power-related problems in your applications.
This document will provide information on the principle of operation and the main hardware components used in the input stage of the power supply and in the serial interfaces.

Contents

1 Protecting the Power Input 2
1.1 Principle of Operation 2
1.2 Overvoltage Protection 2
1.3 Nominal Rating 3
2 Protecting the Communication Ports 4
1.4 Principle of Operation 4
1.5 Overvoltage Protection 4
1.6 Protection on UniOP PLC Port and AUX Port 5

1 Protecting the Power Input

1.1 Principle of Operation

Figure 1 below shows the diagram of the typical power supply input stage in the UniOP operator panels.
Input stages in the different UniOP products are similar but not necessarily same as the one described here.

The input stage has four main functions:
?? Overvoltage protection
?? Overcurrent protection
?? Reverse polarity protection
?? Input filter

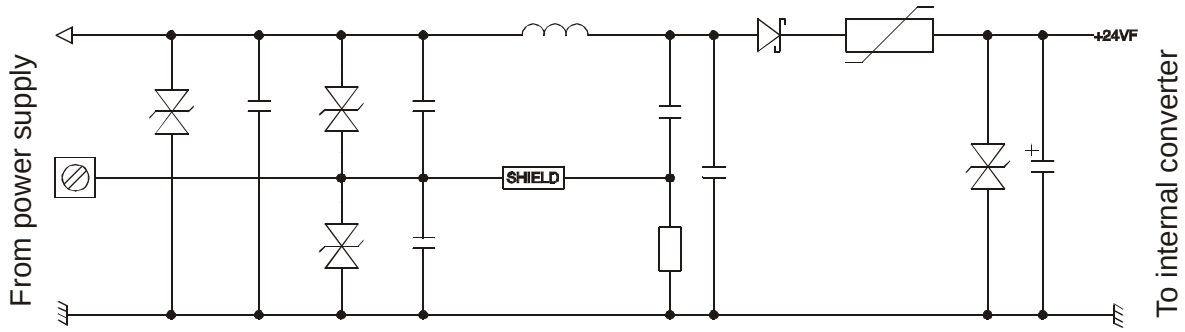

Figure 1 – Power supply input stage

1.2 Overvoltage Protection

A network of bidirectional TRANSIL™ suppressors is implementing the overvoltage protection function. These devices protect the electronic circuitry clamping the input voltage when it is exceeding a certain threshold.

One suppressor is connected between 0 and +24 VDC and works in “common mode”.
Two others are connected to the earth terminal PE and they work in “differential mode”, clamping the voltage respect to the earth terminal reference.

In normal operating conditions the TRANSIL devices can be considered open circuits. As soon as the voltage applied to their terminals exceeds the threshold, they instantaneously clamp to a safe value.

The “Common Mode” suppressor activates when the power supply voltage exceeds its threshold voltage (instantaneous value); when the voltage falls below the threshold, it recovers to its normal status.

“Differential Mode” suppressors activate when:

?? the difference of potential between the +VDC terminal of the power supply and earth is greater than the threshold voltage OR
?? the difference of potential between the Common terminal of the power supply and earth is greater than the threshold voltage

The threshold voltage is typically 39 VDC for most products. Please note that this value may change for different products.

Differential components may activate when the Common terminal of the power supply is floating respect to the earth reference level and there is a difference in the potentials.
Please refer to the UniOP Installation Guides for suggestions on how to wire the power supply in order to minimize these possible problems.

The rating of the TRANSIL suppressors is expressed with the maximum level of energy that they can sustain. The devices used in UniOP are rated at 600W @1 ms.

1.3 Nominal Rating

The nominal value of the power supply voltage for UniOP products is 24 VDC.
The maximum applicable input voltage is 30 VDC +5% of ripple.

Measuring the power supply level with a common digital multimeter is not effective as it can only return the RMS value of the input voltage and not the peak value.
The use of an oscilloscope is necessary to establish the real quality of the power supply source.

2 Protecting the Communication Ports

1.4 Principle of Operation

Figure 1 below shows the diagram of the typical RS-485 interface in the UniOP operator panels. Communication ports in the different UniOP products are similar but not necessarily same as the one described here.

The RS-485 interface can be divided in two sections:
?? RS-485 standard driver
?? Overvoltage protection

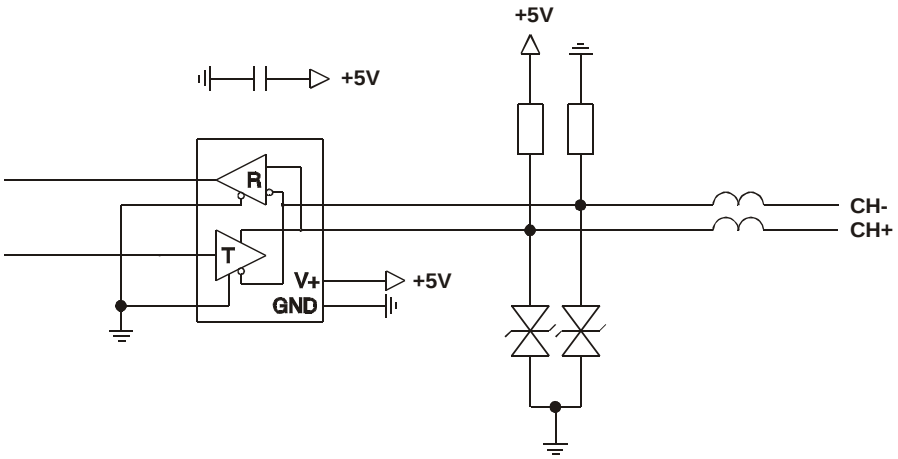

Figure 2 – RS-485 typical communication interface

1.5 Overvoltage Protection

A network of bidirectional TRANSIL™ suppressors is implementing the overvoltage protection function. These devices protect the electronic circuitry clamping the input voltage when it is exceeding a certain threshold.

Two suppressors are connected between 0 (common) and each communication line, before the RS-485 line driver. They are working in “common mode”.

In normal operating conditions the TRANSIL devices can be considered open circuits. As soon as the voltage applied to their terminals exceeds the threshold, they instantaneously clamp to a safe value.

The suppressors activate when the potential of a certain line exceeds its threshold voltage (instantaneous value); when the voltage falls below the threshold, it recovers to its normal status.

The threshold voltage is typically 5.6 VDC for most products. Please note that this value may change for different products.

The rating of the TRANSIL suppressors is expressed with the maximum level of energy that they can sustain.
The devices used in UniOP are rated at 0.1 Joule.

1.6 Protection on UniOP PLC Port and AUX Port

The protection system described above is normally present on UniOP PLC Port for its RS-485 interface and also on AUX port when the panel is equipped with an additional communication module (TCM or SCM), which includes an RS-485 interface.

When communication is done via PLC port, the GND potential is linked to earth by the internal UniOP circuitry as described in the UniOP Installation guide in chapter “Power Supply and Grounding”.

When communication is done via AUX port and the communication protocol uses a physical layer based on RS-485 , the proper grounding is effective only if the fieldbus communication cable is done according to specification.
UniOP communication cables available in the documents “CAxxx.PDF“ are designed according to the specific fieldbus physical layer specifications and they have always to be used as reference when wiring communication cables.

Copyright ? 2002 Sitek S.p.A. Italy
Subject to change without notice.
The information contained in this documentation is provided for informational purposes only. While efforts were made to verify the accuracy of the information contained in this documentation, it is provided “as is” without warranty of any kind.
www.exor-rd.com