UniOP Transmission Configuration

Sometimes the need arises to communicate with the Uniop panel to/from the PC or printer via long cable lengths. In order to accomplish this, the following configuration is suggested.

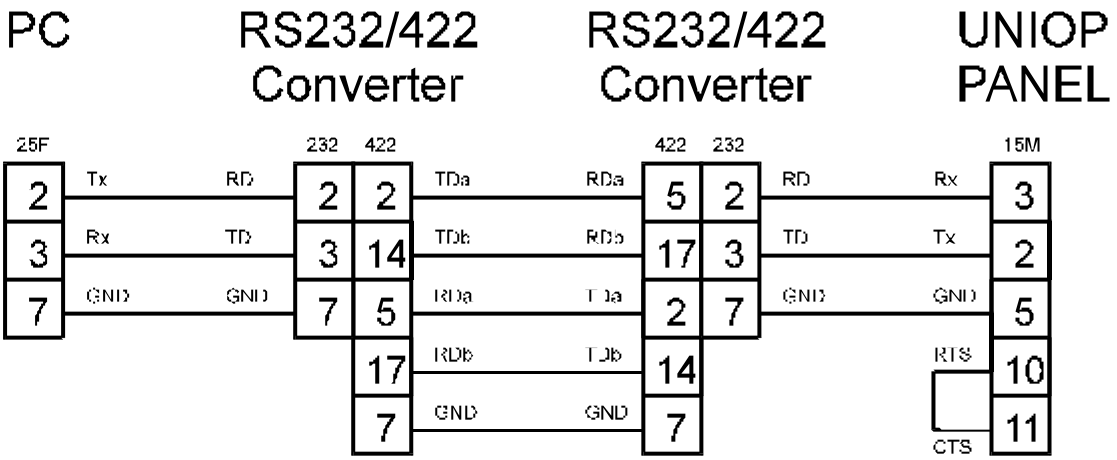

*RS232/422 Converter - Model 422LCON
B & B Electronics Manufacturing Co., 707 Dayton Road,
Ottawa, IL 61350 Ph: (815) 434-0846

*25F - 25 pin D type connector (female)

*15M - 15 pin D type connector (male)

Technical assistance may be obtained :
In North America EXOR at 1-513-874-4665
In Europe EXOR Italy 045 - 8779068