PT100 Temperature Module for UniOP

Contents

1. Introduction 1
2. Technical Description 2
2.1 Block Diagram 3
2.2 Connections and Wiring 4
2.2.1 Analog Input Connector - PT100 Inputs 4
3. Installation and Configuration 5
3.1 How to Configure the Data Area 5
3.2 Organization of the Data Area 6

1. Introduction

This document describes the special PT100 Temperature Module option for UniOP panels.

Note: *The PT100 Temperature Module is* ***NOT a standard option****; it is a special unit that can be used only under restricted conditions. Currently the option is available only as a variation of the Hitachi EM/EC protocol and can be used only with a special hardware version of UniOP panels.*

The PT100 Temperature Module adds 3 PT100 analog inputs to a UniOP panel. The system will perform the signal conditioning, the data acquisition and the linearization of the temperature value. The result of the conversion will be written to the PLC which is connected to UniOP along with the diagnostic information. From the system point of view it is like to have an additional analog module attached to the PLC.

2. Technical Description

The main technical data of the PT100 module are the following:

- 3 PT100 input channels
- 3 wire connection
- resolution of 12 bits/0.1 degrees C
- temperature range 0-30 degrees C
- open channel detection
- short circuit detection on input channels

Note: *no galvanic isolation is provided*

2.1 Block Diagram

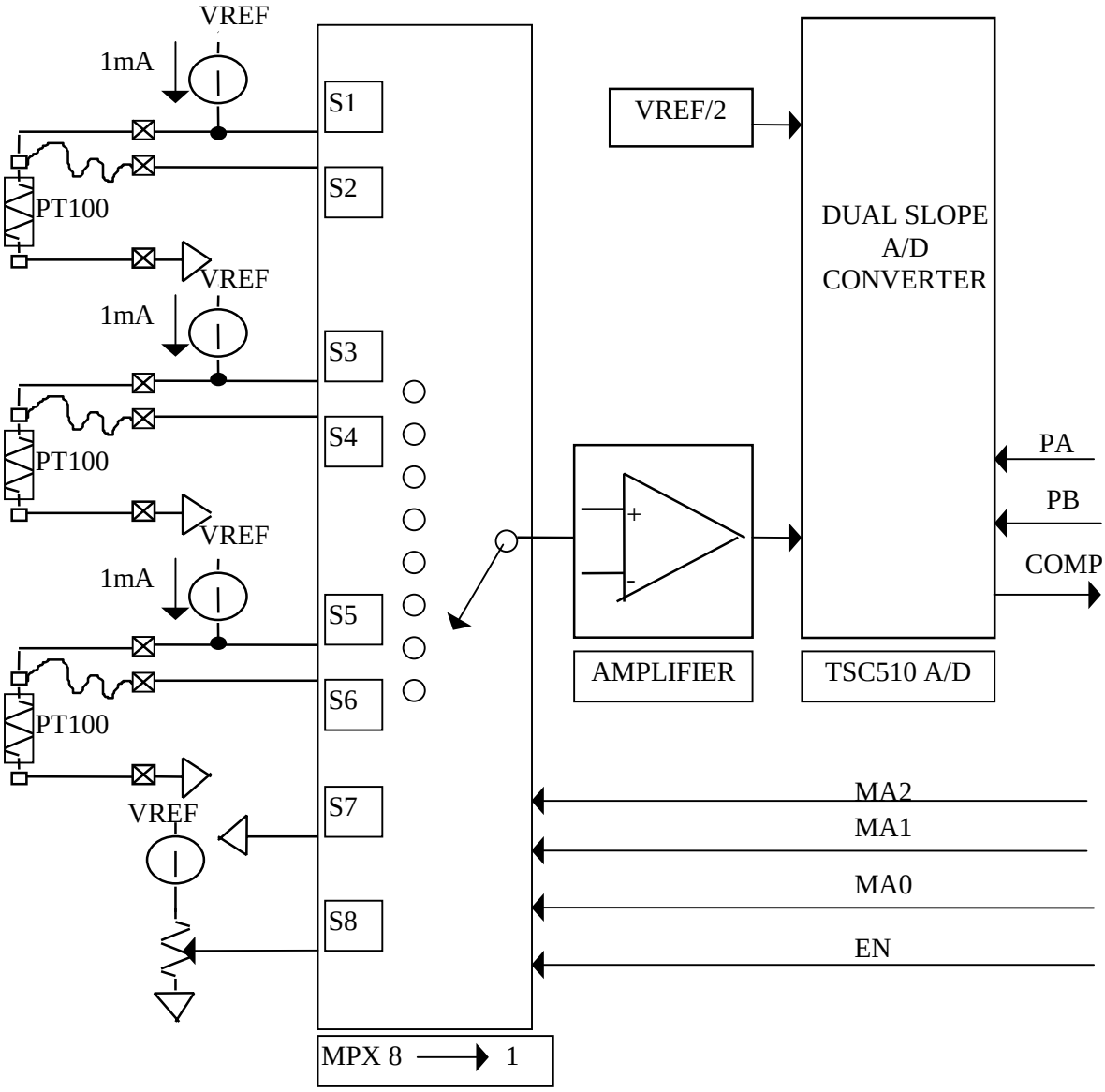

2.2 Connections and Wiring

The figure below shows the connectors available in the special PT100 unit.

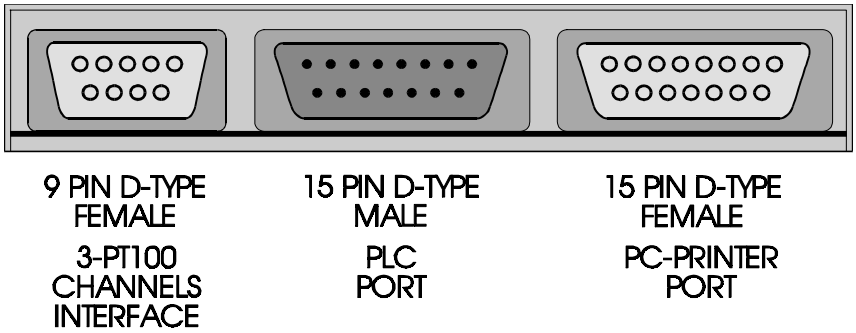

Connectors with 15 pins are exactly the same for standard UniOP models.

2.2.1 Analog Input Connector - PT100 Inputs

A D-type 9 pin female connector is provided for the analog inputs.
The pin-out of the analog input connector is shown in the table below.

Pin	Description
1	CH1 - PT100 1mA current generator
2	CH1 - PT100 voltage sense
3	CH3 - Analog Ground
4	CH2 - PT100 1mA current generator
5	CH2 - PT100 voltage sense
6	CH3 - Analog Ground
7	CH3 - PT100 1mA current generator
8	CH3 - PT100 voltage sense
9	CH3 - Analog Ground

Make sure all analog signal use cables properly shielded.

3. Installation and Configuration

To install and properly configure the PT100 module, follow the steps listed below.

a) install the new version of Designer (internal sub-release 5.05.3 or higher);
b) make a backup copy of the file UPLC32.DLL. This file contains the standard driver for the Hitachi EM/EC PLC's;
c) copy the special DLL UPLC32.DLL to the Designer directory. This will add the modified Hitachi EM/EC (Hitachi PT100 appear as driver name) protocol which includes the support for the analog input module.
d) edit the DESIGNER.INI file as described below. It is necessary to enable the data acquisition process and to configure the position of the data exchange area. Make sure the PLC address specified in the [UPLC32] section points exactly to the area where the temperature data is supposed to be;
e) start the Designer software;
f) go to Project/Change Controller Driver and click on 'Find All';
g) choose the driver 'Hitachi PT100'. Note that this driver is compatible with the standard driver 'Hitachi EM/EC' and adds the special support for the new temperature module.

The installation of the new software is now complete. Projects can be created and edited in the usual manner. When a project file created with this new Designer and driver is executed on a panel equipped with the special PT100 module, the data acquisition is started and the results will be written to the PLC at the address which has been configured for the data exchange area.

3.1 How to Configure the Data Area

It is recommended that the data area is placed in the Internal Output memory (M). The addressing described below refers only to this PLC data type.

Add the following section to the file DESIGNER.INI which can be found in the Windows directory. The new section can be appended at the end of the file.

```
…… .
[UPLC32]
params=0,2,AddressLow,AddressHigh,132,SmuxClock,Frequency,Wiring
…… .
```

AddressLow and **AddressHigh** specify the starting address of the data area in the M memory of the PLC. They are respectively the Least Significant Byte and the Most Significant Byte of the internal PLC address of first byte of the data area.

Example: how to set the beginning of the data area at the address M512
Internal address of M400 = 0x140
Internal address of M512 = 0x140 + hex(512-400) = 0x140 + 0x070 = 0x1B0

AddressLow = dec(0xB0) = 176
AddressHigh = dec(0x1) = 1

SmuxClock specify the frequency in MHz of clock in TIO01 module, dependent on main board.

Main board	SmuxClock (MHz)
E321	10
T320	10
4KT32	12

Frequency (in Hz) is referred to alternate supply. This parameter improve noise rejection modifying the integration time in A/D converter. Permitted values are 50 or 60.

Frequency	Value
50Hz	50
60Hz	60

Wiring was introduced in order to have different hardware configuration:

- three PT100 with wire compensation.
- six PT100 without wire compensation (not available).

Wiring	Value
3 PT100	0
6 PT100	1

Continuing the example, if the main board is a T320, the alternate supply frequency is 60Hz and we are using 3 PT100, the result to be placed in the file is:

```
…… .
params=0,2,176,1,132,10,60,0
…… .
```

3.2 Organization of the Data Area

The system will write the results of the data acquisition to the PLC in a data area composed by 20 registers (20 bytes or 10 words) allocated contiguosly in the PLC memory starting at the address specified in the previous section. The offset indicated in the table below refers to the starting address of the data area. The offset is in bytes.

Offset	Data	Notes
0	Temperature MSB	Channel 1
1	Temperature LSB	
2	Short Circuit Flag	
3	Open Circuit Flag	
4	Temperature MSB	Channel 2
5	Temperature LSB	
6	Short Circuit Flag	
7	Open Circuit Flag	
8	Temperature MSB	Channel 3
9	Temperature LSB	
10	Short Circuit Flag	
11	Open Circuit Flag	
12	Resistance MSB	Channel 1
13	Resistance LSB	
14	Resistance MSB	Channel 2
15	Resistance LSB	
16	Resistance MSB	Channel 3
17	Resistance LSB	
18	ADC Timeout Flag	
19	Comm Error Flag	

1) All temperature values are binary numbers; the value stored is the temperature in Celsius degrees multipied by 100. Example: the temperature 32.4 degrees will be stored as 3240. For the proper presentation in UniOP use either the Fixed point format or the Scaling factors.
2) The value of resistance for all channels is included only for diagnostic purposes.
3) The error flags (Short Circuit and Open Circuit) will contain the following value:

Value	**Status**
0	No error
1	Error

4) The ADC Timeout Flag will reports that an error has been detected in the ADC conversion process. The value of analog data is not reliable when the ADC Timeout Flag is set.