UniOP with Siemens S5 PLC's using 3964R

The version of UniOP referred to as 3964R supports the communication with SIMATIC S5 systems equipped with the CP 524 or CP525-2 Communication Processors.

The communication supports the RK512 Interpreter and the 3964R protocol .

Unlike the UniOP version connecting to the programming port of any S5 CPU using the AS511 protocol, the 3964R protocol requires some special programs to be written in the CPU to support the operation of the Communication Processors, also the CP themselves have to be set up in the way described in the following .
For the communication between the UniOP and the CP the RS-232C has been selected.

This version of UniOP offers the same capabilities offered by the AS511 version, that is access to all Data Blocks and support for all data types.

The general requirments are the following:

? UniOP Operator Panel equipped with proper firmware and RS-232C interface
? UniOP Designer including support for SIMATIC S5 3964R

The Designer support for the 3964R is compatible with the support for SIMATIC S5 PLCs. Project files may be directly converted.

Refer to the UniOP Product Guide for SIEMENS PLC's for additional information.

The CP 524/525 processors offer the possibility of Current Loop or RS-232C connection. The RS-232C has been selected for interfacing UniOP.
The CP 524 requires an additional interface module to be used. Refer to the Simatic S5 Catalog for ordering information.
The CP 525-2 offers both Current Loop and RS-232 in each of the two communication ports.

Note: a UniOP Operator Panel equipped with the RS-232C interface must be used when connecting to the CP 524/525.

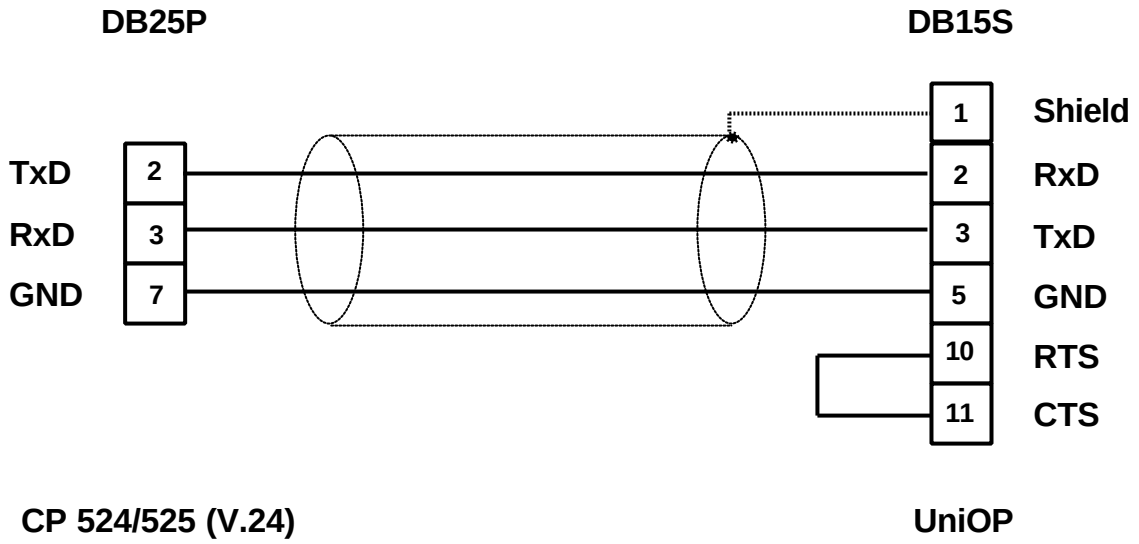

How to Program the CP 524/525 :
The CP 524 or CP 525-2 Communication Processors must be programmed with the RK512 Interpreter and the P3964R Procedure. Both blocks are included in the standard library COMLIBxx which is supplied with the COM 525 software package.

The program for the CP 524 must be loaded in an EPROM module that must be programmed off-line. A 32 KB EPROM module is required.

The program for the CP 525-2 can be loaded in an EPROM module or loaded in the communication module through a serial link connected to the port 2; in this second case a RAM module of 32 KB should be used.

The listing of the sample program as printed by COM 525 is given below.

The parameters assigned to the procedure also define the communication parameters to be used by the UniOP panel.

```
+-----------------------------------------------------------------------+
! SIEMENS SIMATIC S5                                        Page:     1 !
! COM525 - CP525/524                                           03.03.93 !
+-----------------------------------------------------------------------+
! Drive: C         Program: UNIDEMO       Last worked with:   03.03.93 !
! Plant: UniOP CP524 Test                 Generated by:   EXOR R&D     !
+-----------------------------------------------------------------------+

=========================================================================
LENGTH OF PROGRAM:    9321 words
=========================================================================

=========================================
I N T E R P R E T E R / P R O C E D U R E
=========================================

Component: COMPUTER LINK (CL)

Block           Name     Version   Param. ass.
-------------------------------------------------------------------------
Interpreter     RK512       01            -

Procedure       P3964R      01    Baud rate:           9600
                                  Char. length:        8 bits
                                  No. of stop bits:    1
                                  Priority:            lower
                                  Parity:              even
```

Sample Program for AG 115U

A minimal program for handling a CP 524/525 Communication Processor using an AG 115U PLC is listed below.

Note: the standard function blocks required for the communication are already included in all 115U CPUs.

Note that addresses used for PLC data have been defined only for this sample program and may be changed according to the requirements of the program. Also some parameters such as the interface number may be different from the example program.

OB 1 for cyclical program processing

```
OB 1
SEGMENT 1            0000
0000            :JU FB244                send all
0001     NAME   :SEND
0002     SSNR   :     KY 0,0             interface number
0003     A-NR   :     KY 0,0             job number
```

```
0004    ANZW  :     FW 106          condition codeword
0005    QTYP  :     KS
0006    DBNR  :     KY 0,0
0007    QNAF  :     KF +0
0008    QLAE  :     KF +0
0009    PAFE  :     FY 101          parameter error byte
000A          :
000B          : JU FB245            receive all
000C    SSNR  :     KY 0,0          interface number
000D    A-NR  :     KY 0,0          job number
000E    ANZW  :     FW 110          condition codeword
000F    ZTYP  :     KS
0010    DBNR  :     KY 0,0
0011    ZANF  :     KF +0
0012    ZLAE  :     KF +0
0013    PAFE  :     FY 102          parameter error byte
0014          :BE
```

OB 21 manual warm restart

```
OB21
SEGMENT 1           0000
0000          :JU FB249             synchronization CP <-> CPU
0001    NAME  :SYNCHRON
0002    SSNR  :     KY 0,0          interface number
0003    BLGR  :     KY 0,2
0004    PAFE  :     FY 100          parameter error byte
0005          :BE
```

OB22 automatic warm restart after power failure

```
OB22
SEGMENT 1           0000
0000          :JU FB249             synchronization CP <-> CPU
0001    NAME  :SYNCHRON
0002    SSNR  :     KY 0,0          interface number
0003    BLGR  :     KY 0,2
0004    PAFE  :     FY 100          parameter error byte
0005          :BE
```

Sample Program for AG 135U

A minimal program for handling a CP 524/525 Communication Processor using an AG 135U PLC is listed below.

Note: the standard function blocks required for the communication with the CP are not included in the CPU firmware and be available.

Note that addresses used for PLC data have been defined only for this sample program and may be changed according to the requirements of the program. Also some parameters such as the interface number may be different from the example program.

OB 1 for cyclical program processing

```
OB 1
SEGMENT 1           0000
0000          :JU FB126              send all
0001    NAME  :SEND-A
0002    SSNR  :     KY 0,0           interface number
0003    A-NR  :     KY 0,0           job number
0004    ANZW  :     FW 100           condition codeword
0005    PAFE  :     FY 127           parameter error byte
0006          :JU FB127              receive all
0007    NAME  :REC-A
0008    SSNR  :     KY 0,0           interface number
0009    A-NR  :     KY 0,0           job number
000A    ANZW  :     FW 110           condition codeword
000B    PAFE  :     FY 102           parameter error byte
000C          :BE
```

OB 21 manual warm restart

```
OB21
SEGMENT 1           0000
0000          :JU FB125              synchronization CP <-> CPU
0001    NAME  :SYNCHRON
0002    SSNR  :     KY 0,0           interface number
0003    BLGR  :     KY 0,2
0004    PAFE  :     FY 100           parameter error byte
0005          :BE
```

OB22 automatic warm restart after power failure

```
OB22
SEGMENT 1           0000
0000          :JU FB125              synchronization CP <-> CPU
0001    NAME  :SYNCHRON
0002    SSNR  :     KY 0,0           interface number
0003    BLGR  :     KY 0,2
0004    PAFE  :     FY 100           parameter error byte
0005          :BE
```

Cable for Current Loop 20 mA (TTY)

The description of the cable required to use the Current Loop interface is given in this appendix. Note that a UniOP panel equipped with Current Loop interface must be used.

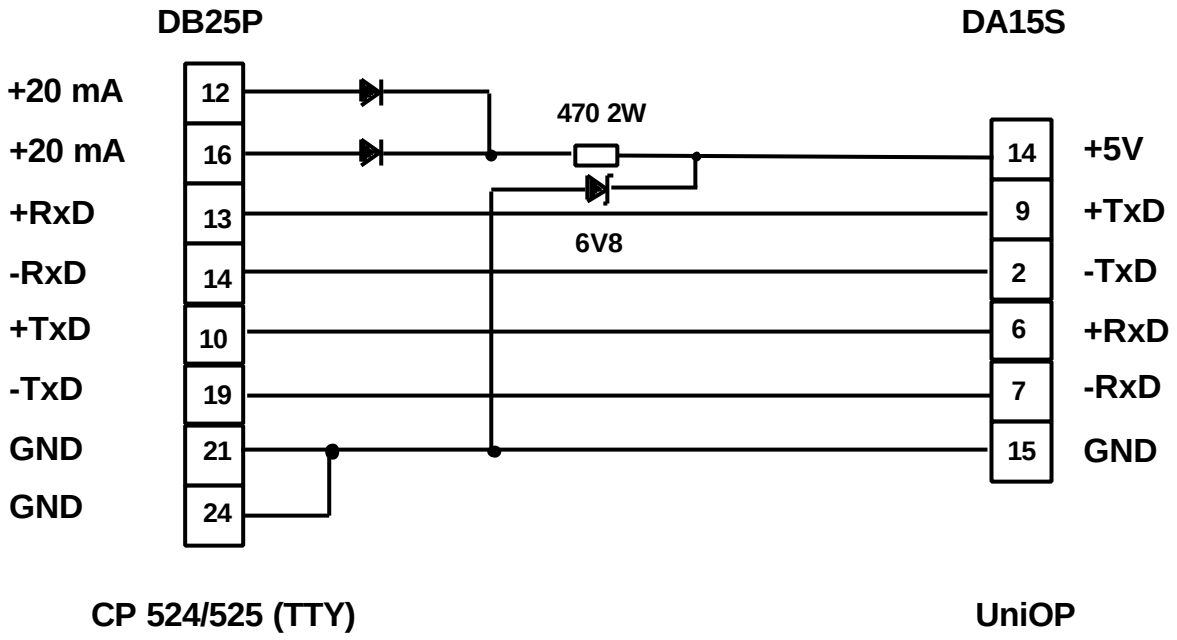

Technical assistance may be obtained :
In North America EXOR at 1-513-874-4665.
In Europe EXOR Italy 045 - 8779068