UniOP MD00R-02 e MD00R-04

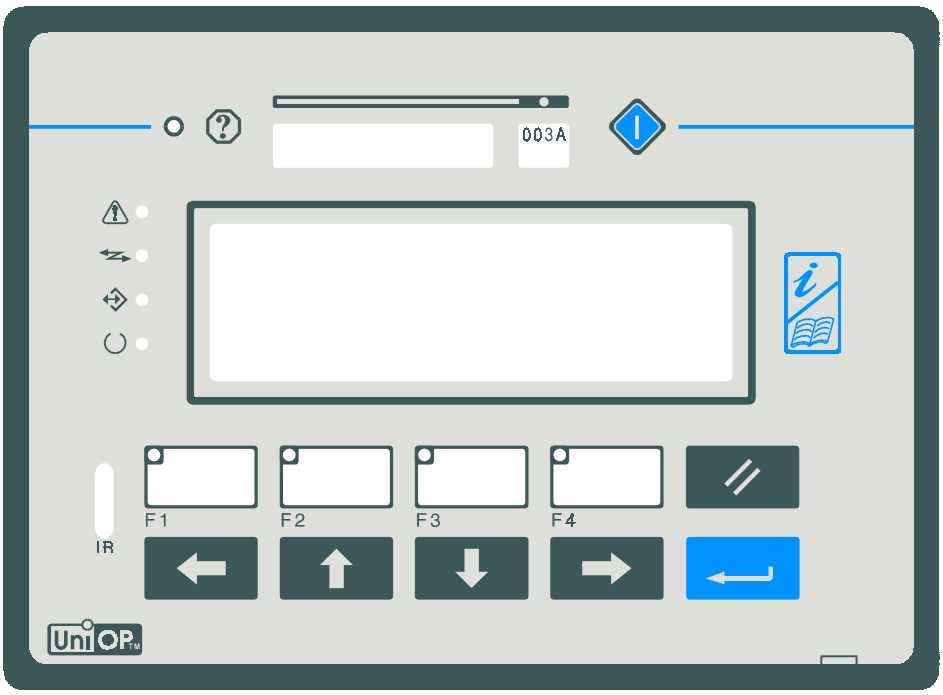

Technical Data

	MD00R-02-0045	MD00R-04-0045
Display	2x20 LCD monochrome	4x20 LCD monochrome
Contrast Adjustment	Software	
Keyboard	4 function keys, 7 system keys	
User LED	5	
Program Memory (Flash)	512 KB (64 Kb reserved to communication driver)	
PC/Printer Port	No	
PLC Port	RS-232, RS-422, RS-485, CL 20 mA (It's used with programming port)	
Aux Port	Yes	
Printer	No	
Alarms	256	
Page info alarm	Yes	
Page Size	32 rows	
Number of Variables per Page	Unlimited	
Hardware clock / calendar	No	
Event List	No	
Recipe	No	
UniNet Network	Client only	
Password	Yes	
Power supply	24 VDC	

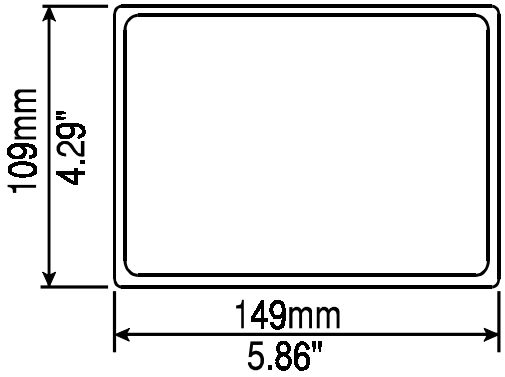
109mm
4.29"
149mm
5.86"

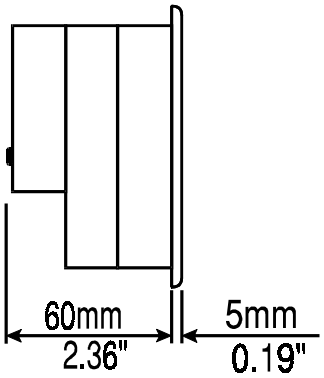
60mm
2.36"
5mm
0.19"

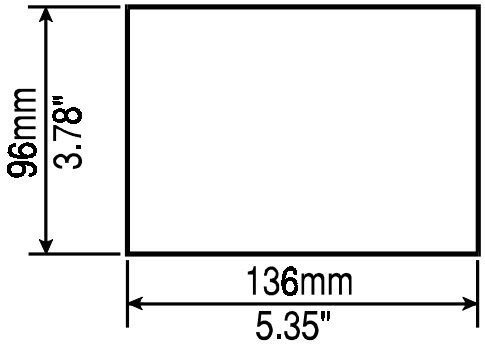
96mm
3.78"
136mm
5.35"